WATER'S LANDING FOREST AND DEVELOPED WOODLAND CALCULATIONS

FOREST AREA IDENTIFIER	EXISTING ACREAGE		CA BUFFER CLEARING^		CA-300' BUFFER CLEARING		CLEARING OUTSIDE BUFFERS		TOTAL PROPOSED CLEARED		PROPOSED RETENTION		1:1 MITIGATION
	SF	AC	SF	AC	SF	AC	SF	AC	SF	AC	SF	AC	
Stand 'A'	207,400	4.76	8,130	0.19	105,300	2.42	93,970	2.16	207,400	4.76	0	0.00	199,270
Stand 'B'	307,860	7.07	2,110	0.05	0	0.00	111,825	2.57	113,935	2.62	193,925	4.45	111,825
Stand 'C'	73,080	1.68	3,510	0.08	10,300	0.24	2,525	0.06	16,335	0.38	56,745	1.30	12,825
Stand 'D'	40,710	0.93	0	0.00	12,475	0.29	0	0.00	12,475	0.29	28,235	0.65	12,475
Stand 'E'	37,665	0.86	3,275	0.08	8,845	0.20	0	0.00	12,120	0.28	25,545	0.59	8,845
Stand 'F'	39,740	0.91	605	0.01	1,500	0.03	0	0.00	2,105	0.05	37,635	0.86	1,500
Stand 'G'	58,680	1.35	1,360	0.03	2,235	0.05	6,270	0.14	9,865	0.23	48,815	1.12	8,505
Stand 'H'	140,160	3.22	4,565	0.10	0	0.00	16,150	0.37	20,715	0.48	119,445	2.74	16,150
Stand 'I'	72,120	1.66	0	0.00	0	0.00	19,355	0.44	19,355	0.44	52,765	1.21	19,355
Stand 'J'	127,250	2.92	34,410	0.79	0	0.00	84,640	1.94	119,050	2.73	8,200	0.19	84,640
Stand 'K'	271,785	6.24	0	0.00	13,680	0.31	236,915	5.44	250,595	5.75	21,190	0.49	250,595
Total	**1,376,450**	**31.60**	**57,965**	**1.33**	**154,335**	**3.54**	**571,650**	**13.12**	**783,950**	**18.00**	**592,500**	**13.60**	**725,985**
^This acreage is not included in the proposed forest clearing as it has been accounted for with the Alternatives Analysis (AA) and Variation of Standards (VOS) Applications.													
Includes forested nontidal wetland impacts associated with the buffer impacts.													

DEVELOPED WOODLAND IDENTIFIER	EXISTING ACREAGE		CA BUFFER CLEARING^		CA-300' BUFFER CLEARING		CLEARING OUTSIDE BUFFERS		TOTAL PROPOSED CLEARED		PROPOSED RETENTION		1:1 MITIGATION
	SF	AC	SF	AC	SF	AC	SF	AC	SF	AC	SF	AC	
Area 'a'	12,845	0.29	0	0.00	0	0.00	0	0.00	0	0.00	12,845	0.29	0
Area 'b'	7,545	0.17	0	0.00	2,995	0.07	0	0.00	2,995	0.07	4,550	0.10	2,995
Area 'c'	81,810	1.88	0	0.00	22,875	0.53	0	0.00	22,875	0.53	58,935	1.35	22,875
Area 'd'	10,260	0.24	0	0.00	5,565	0.13	4,695	0.11	10,260	0.24	0	0.00	10,260
Area 'e'	31,855	0.73	0	0.00	9,665	0.22	0	0.00	9,665	0.22	22,190	0.51	9,665
Area 'f'	3,650	0.08	0	0.00	0	0.00	0	0.00	0	0.00	3,650	0.08	0
Area 'g'	9,560	0.22	0	0.00	0	0.00	0	0.00	0	0.00	9,560	0.22	0
Area 'h'	53,455	1.23	0	0.00	9,295	0.21	0	0.00	9,295	0.21	44,160	1.01	9,295
Area 'I'	20,990	0.48	0	0.00	14,265	0.33	6,725	0.15	20,990	0.48	0	0.00	20,990
Area 'j'	5,660	0.13	0	0.00	5,465	0.13	0	0.00	5,465	0.13	195	0.00	5,465
Total	**237,630**	**5.46**	**0**	**0.00**	**70,125**	**1.61**	**11,420**	**0.26**	**81,545**	**1.87**	**156,085**	**3.58**	**81,545**
^This acreage is included in the proposed forest clearing and accounted for with the Alternatives Analysis (AA) and Variation of Standards (VOS) Applications for buffer mitigation;													
it is not included in the reforestation obligation as 1:1 mitigation.													

POST CONSTRUCTION MANAGEMENT

All temporary forest protection measures will be removed after construction and permanent signage will remain where indicated on the sixth sheet of this plan set.

The "Critical Area Easements" shall be marked in the field at predetermined intervals with permanent below grade markers and protective signage posted at each location to serve as "witness" posts at each rebar location. A digital file of these locations shall be submitted to EPS for future County use. Please see the easement marker detail on the fifth sheet of the plan set.

No grading, excavation, utility placement, erosion control activities, or vehicular traffic will occur within the Critical Area Easements.

Attachment of signs to trees is prohibited.

"CRITICAL AREA EASEMENTS" NOTES

Standard Nondisturbance Note
There shall be no clearing, grading, construction, or disturbance of vegetation in the "Critical Area Easements" except as permitted by the Baltimore County Department of Environmental Protection and Sustainability.

Protective Covenants Note
Any "Critical Area Easements" shown herein is subject to protective covenants which may be found in the Land Records of Baltimore County and which restrict disturbance and use of these areas.

Access Note
Access to the "Critical Area Easements" shall be via Weber Avenue and a Baltimore County Access Easement from "Public Road I." Access to the Forest Buffer and Forest Conservation Easement" shall be via Hopkins Landing Drive.

Long Term Protection Note
Easements will be recorded for all "Critical Area Easements". The easements will require that the removal of any vegetation must be approved by the Baltimore County EPS.

ON-SITE CULTURAL AND NATURAL RESOURCES

RARE, THREATENED AND ENDANGERED SPECIES
According to the United States Fish and Wildlife Service, habitat for the Northern Long Eared Bat is present on-site, however, no individuals have been documented on-site.
FOREST INTERIOR DWELLING BIRDS AND COLONIAL WATER BIRDS
None mapped for this site.

ANADROMOUS FISH AND PROPAGATION WATERS
Tidal adult habitat is present in all waters surrounding the site. All waters surrounding the site also support juvenile populations of white perch, shad, alewife and blueback herring.

PLANT AND WILDLIFE HABITAT AND HISTORIC WATERFOWL STAGING AND CONCENTRATION AREAS
No significant plant and wildlife habitat nor historic waterfowl staging and concentration areas are mapped on-site.

SUBMERGED AQUATIC VEGETATION
Although no submerged aquatic vegetation has been recently mapped for the site, visual observation confirms the presence of scattered submerged aquatic vegetation in waters adjacent to the site.

NATURAL HERITAGE AREAS AND OTHER HISTORICAL/CULTURAL RESOURCES:
No Natural Heritage areas are mapped on site. There are no historical or cultural resources mapped on site.

All information regarding the presence of cultural or natural resources was taken from the State of Maryland's GIS portal, IMAP, in August 2015 unless otherwise stated.

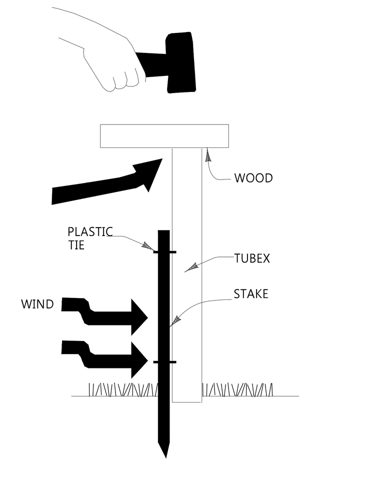

TUBEX INSTALLATION
NOT TO SCALE

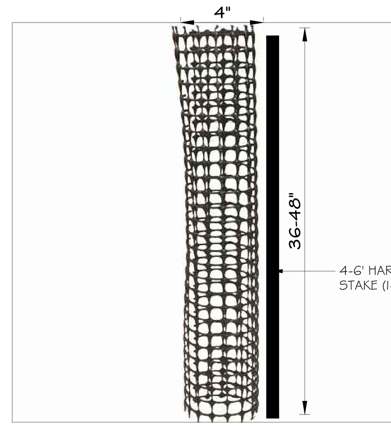

DETAIL NOTES:
- TREEGUARDS ARE TO BE PLACED AROUND THE TRUNKS OF ALL REFORESTATION TREES AT THE TIME OF PLANTING.
- 4' MIN. HARDWOOD GUYING STAKE (MIN 1' INTO THE GROUND) SHALL BE INSTALLED OUTSIDE THE TREEGUARD.
- FASTEN THE TREEGUARD TO THE HARDWOOD STAKE WITH TWO (MIN.) 11-INCH RELEASABLE CABLE TIES (ONE AT TOP AND ONE 6" (MIN.) ABOV EHT GROUND.
- DO NOT DAMAGE THE TREE DURING INSTALLATION.
- SUBSTITUTIONS MUST BE APPROVED BY A QUALIFIED PROFESSIONAL OR LANDSCAPE ARCHITECT FAMILIAR WITH THIS PLAN ZIP-TIE OR 16 GAUGE WIRE.

MANUFACTURER: A.M. LEONARD TOOL & SUPPLY COMPANY
PHONE: (800) 543-9445
WEBSITE: https://www.amleo.com/
PRODUCT: RIGID PLASTIC MMESH TREE GUARDS (BG36 OR BG48)
SIZE: 3' OR 4' HGT.
COLOR: N/A

TREE PROTECTION DETAIL
NOT TO SCALE

PLANTING PROCEDURES FOR ALL CONTAINER GROWN TREES AND SHRUBS:

1. REMOVE THE PLANT EITHER BY CUTTING OR INVERTING THE CONTAINER
2. GENTLY LOOSEN ROOTS FROM SOILS. ROOTS MAY NOT BE CUT OR TRIMMED ON SITE
3. PLANT SHRUB OR TREE 1 TO 2 INCHES ABOVE THE EXISTING GRADE
4. APPLY 2 TO 3 INCH THICK LAYER OF SHREDDED HARDWOOD MULCH

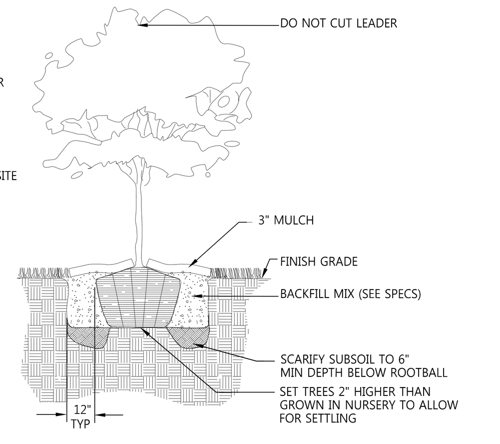

TYPICAL TREE PLANTING
(FOR CONTAINER GROWN)
NOT TO SCALE

NOTES:

1. FOR CONTAINER SHRUBS, COMPLETELY REMOVE ALL NON-BIODEGRADABLE CONTAINERS AND SCARIFY ROOTBALL BY USING A SHARP BLADE AND MAKING 4 TO 5 ONE INCH CUTS THE LENGTH OF THE ROOTBALL.
2. FOR B&B SHRUBS, CUT AND REMOVE BURLAP FROM TOP 1/3 OF ROOT BALL.

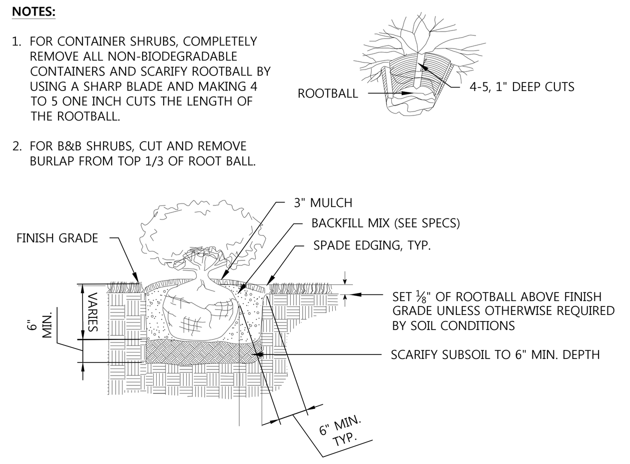

TYPICAL SHRUB PLANTING
(FOR CONTAINER GROWN)
NOT TO SCALE

LEGEND

- PROPERTY LINE
- ADJACENT PROPERTY
- EXISTING MAJOR CONTOUR (10)
- EXISTING MINOR CONTOURS (8)
- 100 YEAR FLOODPLAIN
- APPROVED CRITICAL AREA (CA) BUFFER (CA)
- 300' BUFFER
- EXISTING EDGE OF PAVING
- EXISTING WATER (W)
- EXISTING SEWER (S)
- EXISTING STORMDRAIN (SD)
- EXISTING ELECTRIC (E)
- EXISTING STREAM CENTERLINE
- EXISTING FOREST LIMITS
- EXISTING DEVELOPED WOODLAND LIMITS
- PROPOSED LIMIT OF DISTURBANCE
- EXISTING ZONING (DR 2 / DR 3.5)
- EXISTING SOILS (WuB / MhB)
- EXISTING LOT COVERAGE
- BUILDING SETBACK
- CHESAPEAKE BAY CRITICAL AREA BOUNDARY
- EXISTING NONTIDAL WETLANDS LIMITS
- EXISTING TIDAL WETLANDS LIMITS
- EXISTING SLOPES 15% - 25%
- EXISTING SLOPES 25% AND GREATER

- FOREST RETAINED THROUGHOUT THE PROPERTY TOTAL: ±602,415 SF/±13.83 AC
- FOREST CLEARED OUTSIDE THE 300' BUFFER TOTAL: ±571,650 SF/±13.12 AC
- FOREST CLEARED BETWEEN THE CA AND 300' BUFFER TOTAL: ±144,085 SF/±3.31 AC
- DEVELOPED WOODLANDS RETAINED THROUGHOUT THE PROPERTY / TOTAL: ±156,085 SF/±3.58 AC
- DEVELOPED WOODLAND CLEARED OUTSIDE THE 300' BUFFER / TOTAL: ±11,420 SF/±0.26 AC
- DEVELOPED WOODLANDS CLEARED BETWEEN THE CA AND 300' BUFFER TOTAL: ±70,125 SF/±1.61 AC
- ALTERNATIVES ANALYSIS / VARIATION OF STANDARDS IMPACTS WITH FOREST CLEARING ACCOUNTED FOR ON SHEET 3 / TOTAL: ±57,280 SF/±1.31 AC

DATA SOURCES:

1. TOPOGRAPHIC INFORMATION SHOWN HEREON IS TAKEN FROM BALTIMORE COUNTY GIS AND DOES NOT REPRESENT A FIELD RUN SURVEY.
2. BOUNDARY SHOWN HEREON IS TAKEN FROM A BOUNDARY SURVEY CONDUCTED BY DMW, INC., DATED 3/28/2006.
3. ZONING INFORMATION SHOWN HEREON IS PROVIDED BY BALTIMORE COUNTY OFFICE OF PLANNING GIS OFFICE.
4. EXISTING SOIL INFORMATION SHOWN HEREON IS PROVIDED BY SOIL DATA MART, PUBLISHED IN 2010 BY NATURAL RESOURCES CONSERVATION SERVICES (NRCS).
5. WETLANDS AND STREAMS SHOWN HEREON WERE DELINEATED BY DMW INC. AND APPROVED BY BALTIMORE COUNTY ON 1/8/15.
6. THE BUFFERS SHOWN HEREON WERE APPROVED BY BALTIMORE COUNTY ON 8/28/2015.

APPENDIX REFERENCES:
- GA APPENDIX XVI

100 0 100 200 300
SCALE: 1"=100'

DAFT McCUNE WALKER INC
501 FAIRMOUNT AVENUE SUITE 300 TOWSON, MD 21286
P: 410 296 3333 F: 410 296 4705 WWW.DMW.COM

Chesapeake Bay Critical Area Management/Forest Protection Establishment - Forest Resource Impacts Plan

WATER'S LANDING

SEAL

DATE	BY	REVISIONS

ISSUE DATES			
REVIEW:	08/03/2021	BASE:	RRT
BID:		DRAWN:	RRT/EJC
PERMIT:		DESIGNED:	EJC
CONSTRUCTION:		CHECKED BY:	
SCALE:	1"=100'	DATE CHECKED:	
PROJECT NO.:	01063.J1	DRAWING:	4 of 7

A:\01063\01063J1\ENGR\CAD FILES\SHEET FILES\01063J1_CAMP_04.DWG TUE, AUG 03, 2021